GIGA SERIES

ISUZU TRUCKS

MODEL	**QL1180JQFRCY**
GVW	**18,000 kg**
PAYLOAD	**12,550 kg**

ENGINE

POWER 151 kW @ 2,600 rpm

TORQUE 650Nm @ 1,600 - 2,800 rpm

TRANSMISSION

6 speed manual transmission (MT)
1 Reverse

ENGINE	
DESCRIPTION	Isuzu 4KH1-TCG60
TYPE	4 cylinder in-line diesel
DISPLACEMENT	5.193 cc
COMPRESSION RATIO	17.5:1
BORE X STROKE	115 mm x 125 mm
POWER	151 kW (205 PS) @ 2,600 rpm
TORQUE	650Nm @ 1600 - 2800 rpm
INDUCTION	Electronically controlled variable nozzle turbocharger with air -to air intercooler.
FUEL INJECTION	Direct injection high pressure common rail system
EMISSION CONTROL	SCR+ DPF (Euro VI compliant).

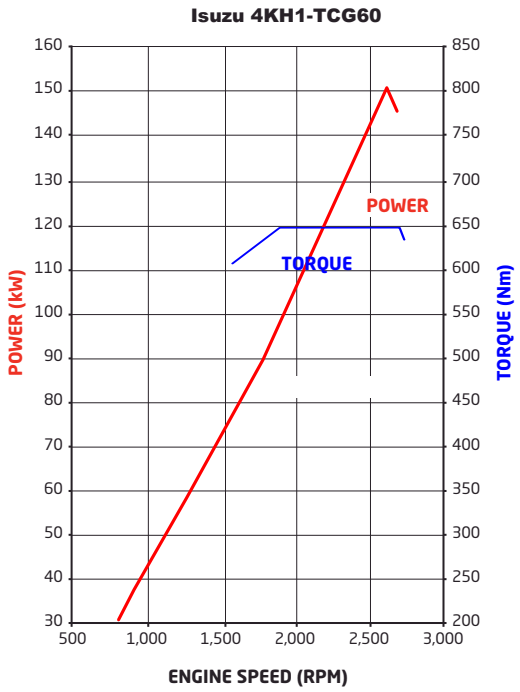

GIGA SERIES

ISUZU TRUCKS

CAB	
AIR CONDITIONING	A/C Manual
SEATS	2 seats
DOOR WINDOWS	Electric control
CAB DOORS	2 Doors
CENTRAL LOCKING	Remote control
SUSPENSION	
FRONT	Coil springs Double acting hydraulic shock absorbers
REAR	Taper leaf main, taper leaf helper spring Double acting hydraulic shock absorbers
WHEELBASE	
WHEELBASE	5000 mm
AXLE	
AXLE NUMBER	2
TYPE	4X2, 6 wheels
STEERING	
TYPE	Hydraulic steering wheel left hand drive
TILTING	Manual tilt
CLUTCH	
MT	**Type:** Single plate with auto adjusting hydraulic control and vacuum assistance
TRANSMISSION	
MT	**Description:** MLD-6Q **Type:** 6 speed manual. Syncromesh on gears 1-6 forward , 1 reverse.

Ratios:

1ST	2ND	3RD	4TH	5TH	6TH	REV
6.388	3.486	2.152	1.423	1.000	0.794	6.015

WEIGHTS	
GVW (Kg)	18,000 KG
PAYLOAD	12,550 KG

BRAKES	
TYPE	Air pressure, dual circuit, drum brake
AUXILIARY BRAKE	Vacuum controlled exhaust brake
BREAKING SYSTEM	ABS
TYRES	
FRONT	Single tires 295/80R22.5 16 PR
REAR	Double tires 295/80R22.5 16 PR
SPARE TIRE	1 frame mounted spare wheel and tyre assembly
CHASSIS FRAME	
TYPE	Cold rivetted ladder frame. SAPH440 steel sidemembers.
SIDES BAR	Aluminum Side-guard Protection
ELECTRICAL SYSTEM	
TYPE	24 volt
ALTERNATOR	120 amp
STARTER MOTOR	5.0 kW
COLOR	
COLOUR	White
INSTRUMENTATION	
MULTI INFORMATION DISPLAY	Low engine oil level alert (activated when oil pan < 71% capacity) Vehicle systems status Low fuel level alert Fuel consumption information Engine coolant temperature and fuel level gauges Adjustable vehicle speed warning

DIMENSIONS (mm)				
MODELS	**WB**	**OAL**	**CH**	**ORT**
GIGA series	5,000	7,935	2,780	2,530

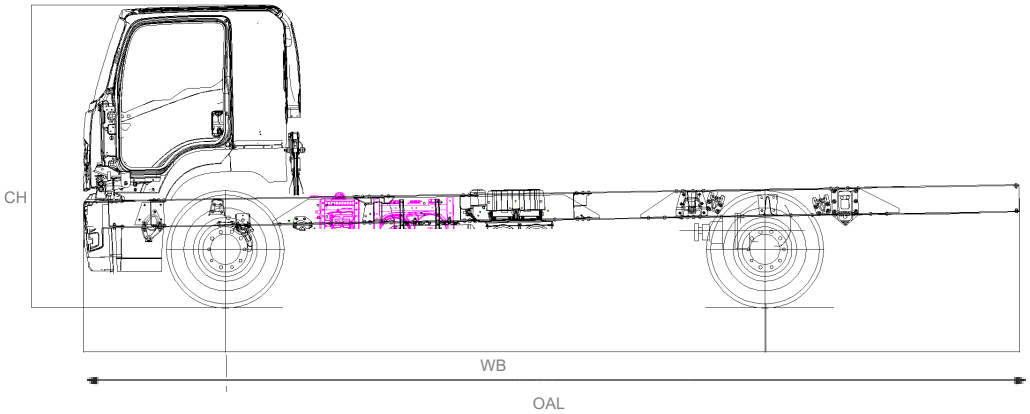

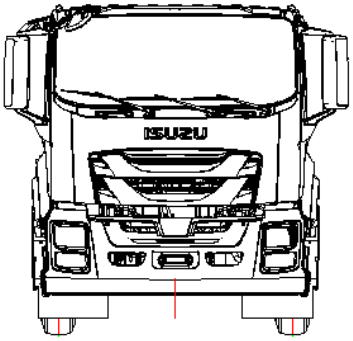

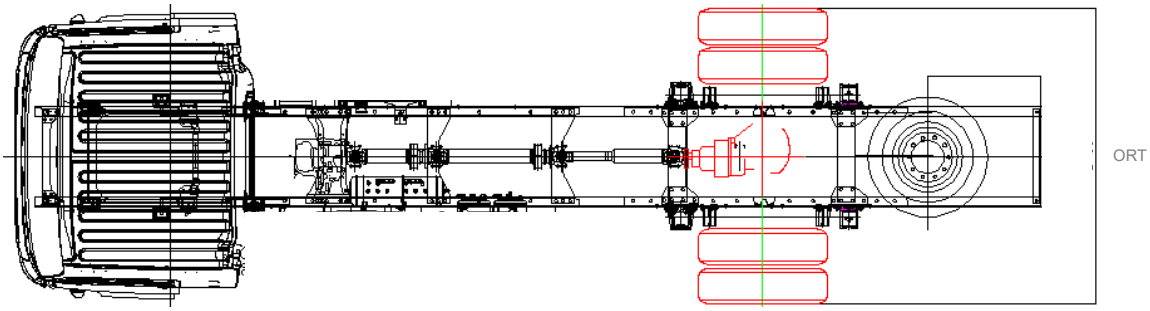

Water Tanker 5,000L Upper Body Specification
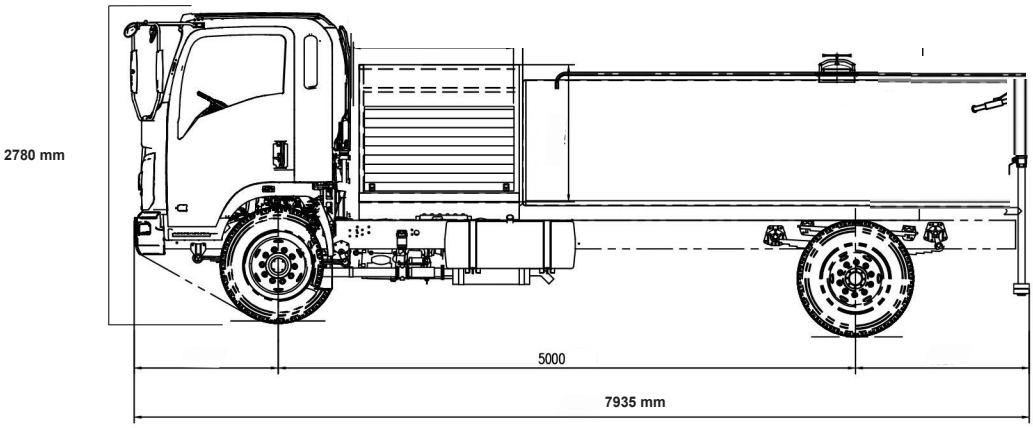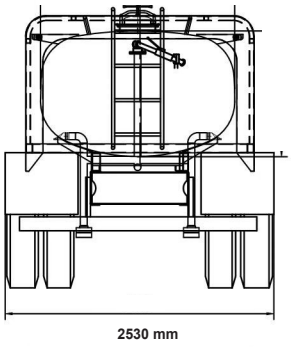
Tank Capacity	**5,000** Liters	**Tool box**	Behind cabin
Tank Material	Standard carbon steel material, 4mm thick	**Frame**	Equipped
Application	Non-potable Water Grade	**Loading system**	Top filling from manhole, Suction vacuum pump, Hydrant connection.
Manhole cover	Carbon steel	**Discharging system**	Gravity discharge
Suction pump	driven by PTO	**Walkway**	Carbon steel material,
Ladder	Equipped	**Water Jetting Nozzle**	Equipped with 6-10 nozzles
Color and Logo	According to wish	***Documents***	English operation manual